DPS PUMPS

SELF-PRIMING CENTRIFUGAL PUMP

FSR Series

DPS PUMPS -
A Division of Diesel Parts & Service Pty. Ltd. *A.C.N. 009 818 848*
21 Hilda Street
Hamilton, Brisbane, Qld. 4007

Ph: 07 - 3268 1062
Fax: 07 - 3868 1330

DPS PUMPS

SELF PRIMING CENTRIFUGAL PUMP

FSR Series

TECHNICAL FEATURES

1. SELF PRIMING. No foot valve needed.
2. MIXED FLOW TYPE IMPELLER
3. SEALED BEARINGS
4. HEAVY DUTY - cast iron construction
5. ROTATION - clockwise
6. OPTIONS: MECHANICAL SEAL
   STAINLESS STEEL SHAFT

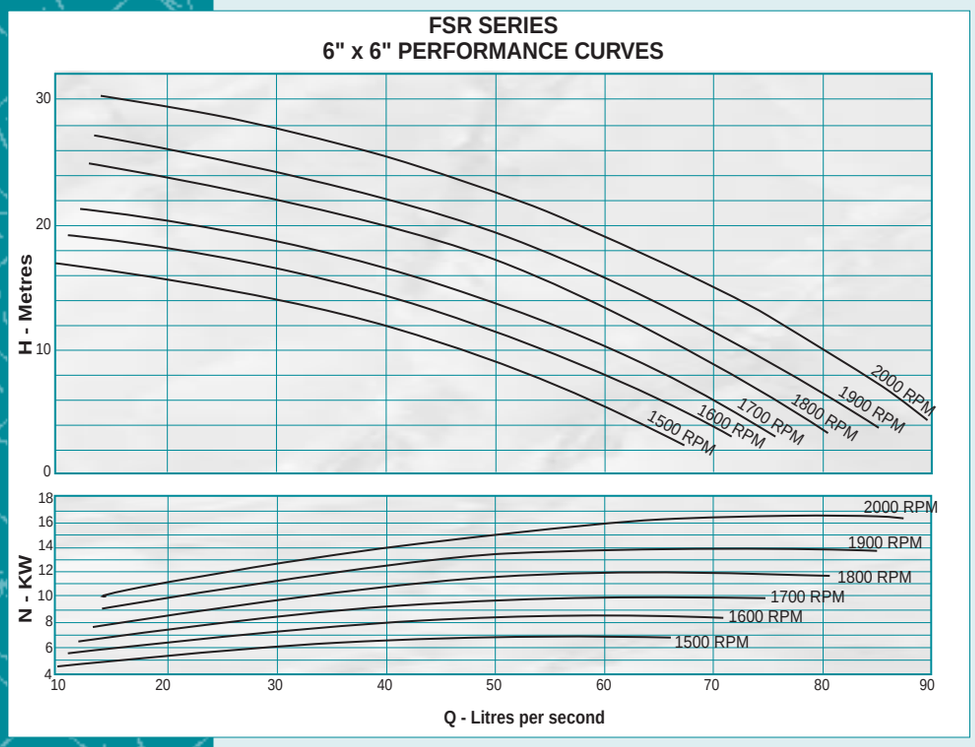

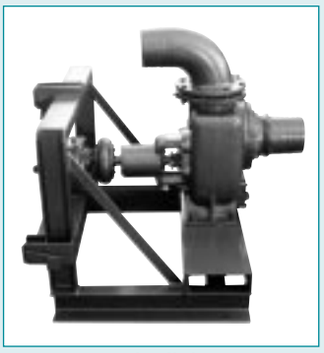

FSR150 3 point linkage P.T.O. unit

FSR150 Engine Set

PARTS LIST

No.	PART NAME
1	SUCTION FLANGE
2	CHECK VALVE
3	DISCHARGE FLANGE
4	PUMP CASING
5	IMPELLER
6	BEARING CASING
7	SHAFT
8	PULLEY
9	GLAND
10	IMPELLER NUT
11	WEAR RING
12	GLAND PACKING
13	WATER THROWER
14	DRAIN COVER
15	DRAIN PLUG
16	BEARING
17	PRIMING PLUG
18	OUTSIDE COVER
19	WASHER
20	BEARING END COVER

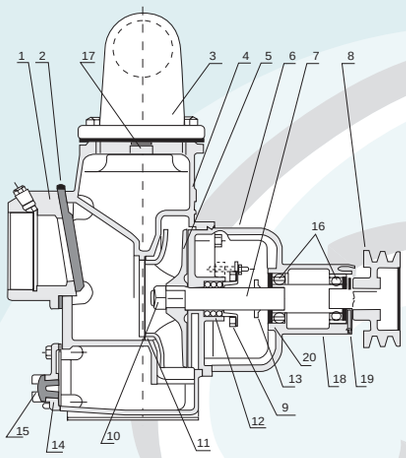

DISTRIBUTED BY: