DPS PUMPS

BUTTERFLY VALVES

Flanged - Table D drilling
Flanged - Chinapump drilling

DPS PUMPS -
A Division of Diesel Parts & Service Pty. Ltd. *A.C.N. 009 818 848*
21 Hilda Street
Hamilton, Brisbane, Qld. 4007

Ph: 07 - 3268 1062
Fax: 07 - 3868 1330

DPS PUMPS

BUTTERFLY VALVES

Flanged - Table D drilling
Flanged - Chinapump drilling

SPECIFICATIONS

Description: ***Flanged butterfly valves***
100 metres of head
Gear operated
Open / close indicator
Mast extensions available

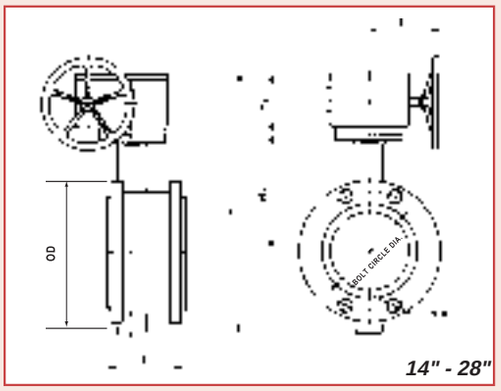

14" - 28"

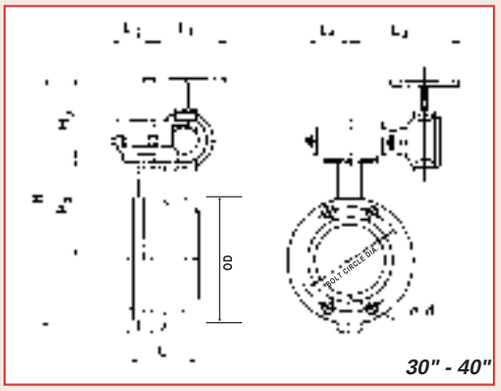

30" - 40"

Flanged Table D drilling

Nominal Sizes inch	Nominal Sizes mm	Nominal Sizes inch	Nominal Sizes mm
14"	350mm	28"	700mm
16"	400mm	30"	750mm
18"	450mm	32"	800mm
20"	500mm	36"	900mm
24"	600mm	40"	1000mm

Flanged - Chinapump drilling

Model	Nominal Sizes inch	Nominal Sizes mm
500HW	20"	500mm
26HBC	26"	650mm

Table D Flange Specifications

DN		Flange	Bolt Circle			*Valve Dimensions*						
mm	in	OD	Dia	n - d	H	H_2	H_3	L	L_1	L_2 L_4	L_3	Kg
350	14	525	470	12xM24	857	375	212	190	160	-	-	120
400	16	580	521	12xM24	965	395	265	216	220	-	-	180
450	18	640	584	12xM24	1010	420	265	222	220	-	-	207
500	20	705	641	16xM24	1105	480	265	229	220	-	-	237
600	24	825	756	16xM27	1340	515	380	267	320	-	-	453
700	28	910	845	20xM27	1462	577	380	292	320	-	-	590
750	30	995	927	20xM30	1350	620	270	305	483	190	622	690
800	32	1060	984	20xM33	1450	620	270	318	483	190	622	770
900	36	1175	1092	24xM33	1630	715	285	330	567	268	655	1105
1000	40	1255	1175	24xM33	1720	755	285	410	567	268	655	1330

Chinapump Flange Specifications

DN		Flange	Bolt Circle	
mm	in	OD	Dia	n - d
500	**20**	**640**	**600**	**10xM22**
650	**26**	**840**	**770**	**12xM27**

DISTRIBUTED BY: